T128V/3MLCD...5TS

Welding environment

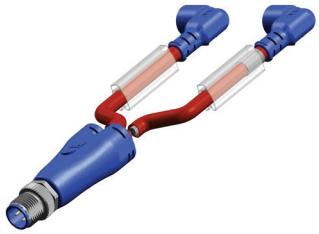

RoHS

Technical data :	
Rated voltage	48 V AC/DC
Rated current	2 A
Insulation resistance	> 1000 MΩ
Ambient temperature range	-25...70 °C
Protection :	
Protection degree	IP65
M12 male Y connector :	
Locking nut/screw material	Zamak, nickel-plated
Overmoulding material	TPU, self-extinguishing
Contact diameter	Ø1 mm
Contact material	CuZn, pre-plated with nickel and gold-plated
Contact resistance	< 5 mΩ
M8 angled female connector (2x) :	
Locking nut/screw material	CuZn, nickel-plated
Spot welding splash protection sleeve	
Overmoulding material	TPU, self-extinguishing
Contact diameter	Ø1 mm
Contact material	CuZn, pre-plated with nickel and gold-plated
Contact resistance	< 5 mΩ
Cable characteristics :	
Sheath material	PVC
Wire structure	3 x 0,25 mm^2
Conductor class	5
Sheath diameter	3,7 mm
Flame resistance according to	IEC 60332-1 (VDE 0472-804/B)
Cable protection characteristics :	
Silicone rubber-coated fiberglass braided sleeving	
Max. contact temperature	+250°C (peak +290°C)
Max. sleeving length = 5 m	
Cable length :	
L standard lengths	1 m / 2 m / 5 m
Other length	On request
Reference : replace «…» by length required: 1/2/5	
Accessories (included) :	
2 label holders	
Notes :	
X : Coloured marker	

Dimensions :

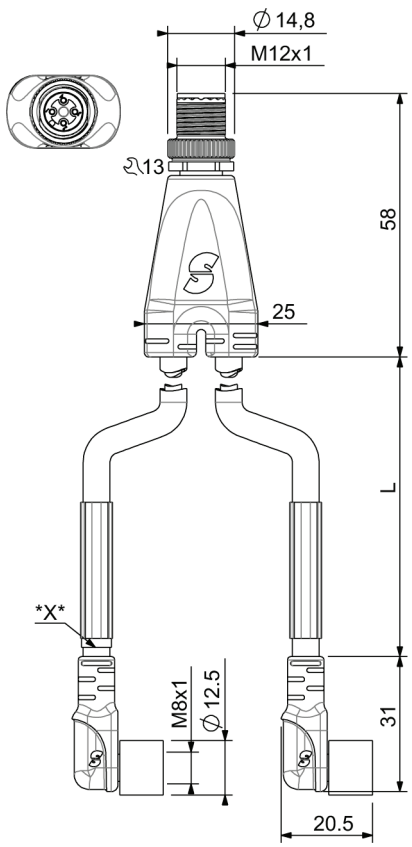
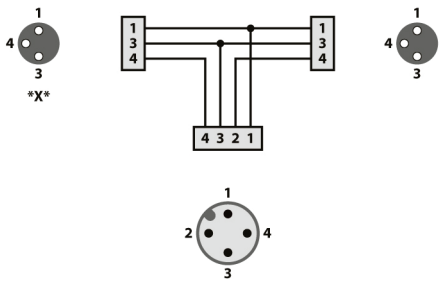
Wiring diagram :