# REP45/50055DSC28P1

**Press tools**

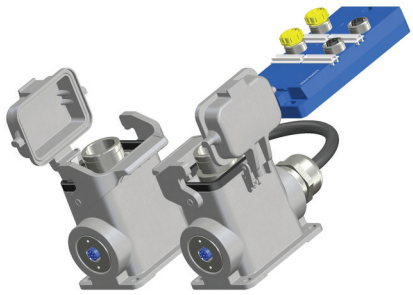

RoHS CE

| | |
|---|---|
| **Technical data :** | |
| Operating voltage | 10…55 V DC (10…30 V DC for encoding part) |
| Nominal current per signal | 4 A |
| Total current | 4 A |
| Ambient temperature range | -25…70 °C |
| **Protection :** | |
| Protection degree | IP67 / IP65 (“série 28”) |
| **Materials :** | |
| Housing | Anodized aluminium |
| Potting | PUR (UL94-V0 self-extinguishing) |
| **M12 female receptacle :** | |
| Receptacle material | CuZn, nickel-plated |
| Contact diameter | 5 x Ø1 mm |
| Contact material | CuZn, pre-plated with nickel and gold-plated |
| Contact resistance | < 5 mΩ |
| **Male receptacle N°1(*A*), N°2(*B*) ("series 28") :** | |
| Mounting type | External screwing |
| Receptacle material | CuZn, nickel-plated |
| Contact diameter | Ø1 mm |
| Contact material | CuZn, pre-plated with nickel and gold-plated |
| Contact resistance | < 5 mΩ |
| Contact arrangement according to UTE C93-422-L2 | |
| **M12 female connector, 8-poles (No. 1 & Np. 2: *C* and *D* details) :** | |
| Receptacle material | CuZn, nickel-plated |
| Contact diameter | 8 x Ø0,8 mm |
| Contact material | CuZn, pre-plated with nickel and gold-plated |
| Contact resistance | < 5 mΩ |
| Tool coding: place to mount SHUNTCODP | |
| **Cable characteristics :** | |
| Sheath material | Halogen free PUR |
| Wire structure | 3 G 1 mm² + 8 x 0,34 mm² |
| Conductor class | 6 |
| Sheath diameter | 8,7 mm |
| Flame resistance according to | IEC 60332-1 (VDE 0472-804/B) |
| Oil resistance according to | EN 50363 & IEC 60811-2-1 & CNOMO |
| **Cable length :** | |
| L1 length | 0,5 m |
| L2 length | 0,2 m |
| L1 and L2 on request | On request |
| **Accessories (included) :** | |
| 5 label holders (KM6/27) | |
| 2 caps (OBTM12) | |
| **Accessories (not included) :** | |
| Coding plug (SHUNTCODP) | |
| **Remarks :** | |
| *E* : Visual identification (red marking) | |

*Dimensions :*

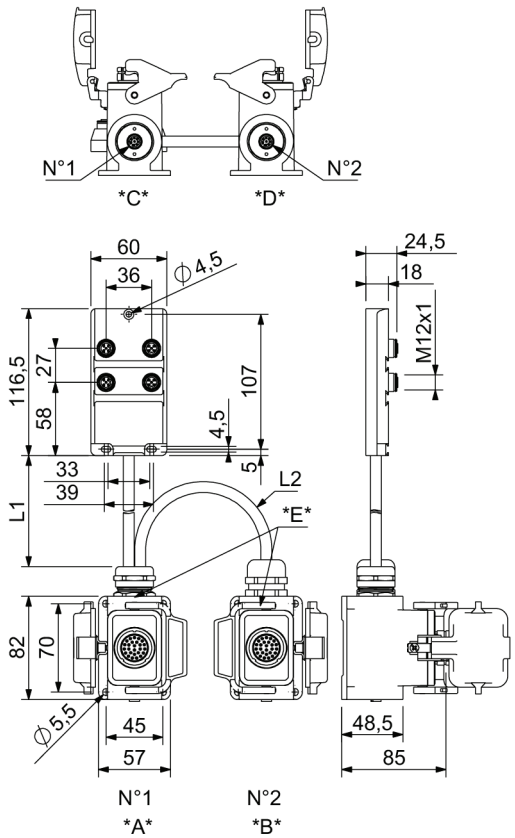


*Wiring diagram :*

**See following page**



*For uses in particularly harsh environments: Please enquire*
*We reserve the right to modify all or part of characteristics of our products without warning.*

*Printed on: 09 déc. 2020*

*SENSTRONIC S.A.S. • 22 rue des Rustauds, 67700 MONSWILLER • Tél. +33 (0)3 88 71 26 33 • e-mail : contact@senstronic.com*

*Wiring diagram :*

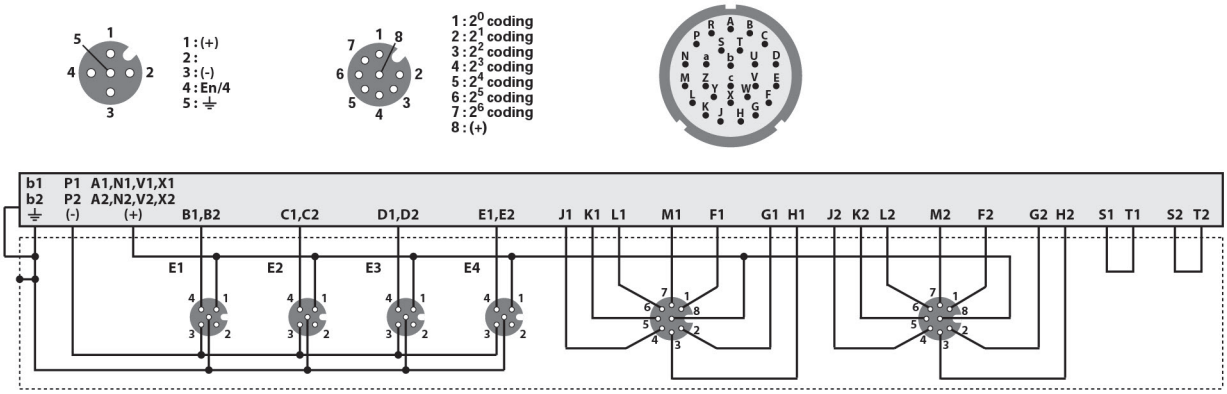


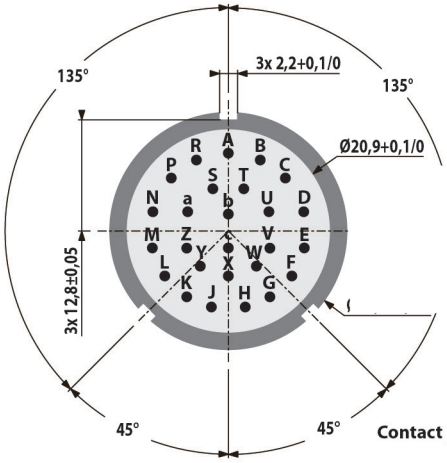


**Contact position according to UTE C93-422-L2**



*For uses in particularly harsh environments: Please enquire*
*We reserve the right to modify all or part of characteristics of our products without warning.*

*Printed on: 09 déc. 2020*

*SENSTRONIC S.A.S. • 22 rue des Rustauds, 67700 MONSWILLER • Tél. +33 (0)3 88 71 26 33 • e-mail : contact@senstronic.com*