OBTL04M08SW16

Nuts sensor
L04,6

RoHS

Materials :	
Housing	Stainless steel
Coating (tip and body)	Titanium Nitride

Operating conditions :

Sensor reference to associate to this accessory : C12T305L040932
Detected nuts : M8 ferromagnetic nuts
(*) : Optimal sensing point

Dimensions :

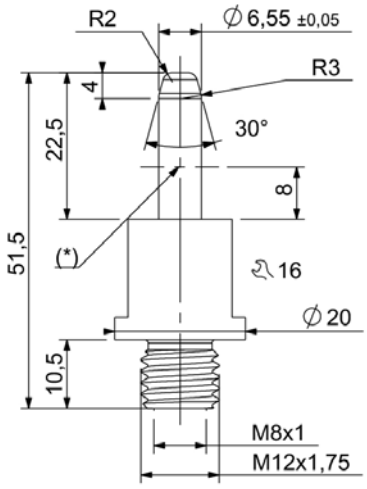

SENSTRONIC S.A.S. • 22 rue des Rustauds, 67700 MONSWILLER • Tél. +33 (0)3 88 71 26 33 • e-mail : contact@senstronic.com