L12/5MLCD15

Industrial automation

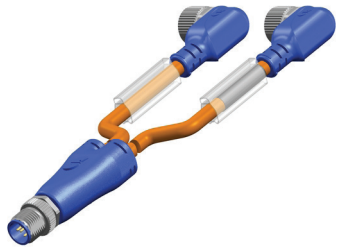

RoHS

Technical data :	
Rated voltage	60 V AC/DC
Rated current	4 A
Insulation resistance	> 1000 MΩ
Ambient temperature range	-25…70 °C
Protection :	
Protection degree	IP67
M12 male Y connector :	
Locking nut/screw material	Zamak, nickel-plated
Overmoulding material	TPU, self-extinguishing
Contact diameter	Ø1 mm
Contact material	CuZn, pre-plated with nickel and gold-plated
Contact resistance	< 5 mΩ
M12 angled female connector (2x) :	
Locking nut/screw material	Zamak, nickel-plated
Overmoulding material	TPU, self-extinguishing
Contact diameter	Ø1 mm
Contact material	CuZn, pre-plated with nickel and gold-plated
Contact resistance	< 5 mΩ
Cable characteristics :	
Sheath material	PVC
Wire structure	5 G 0,34 mm^2
Conductor class	6
Sheath diameter	5,8 mm
Flame resistance according to	IEC 60332-1 (VDE 0472-804/B)
Cable length :	
L length	1 m
Other length	On request
Accessories (included) :	
2 label holders	
Notes :	
X : Coloured marker	

Dimensions :

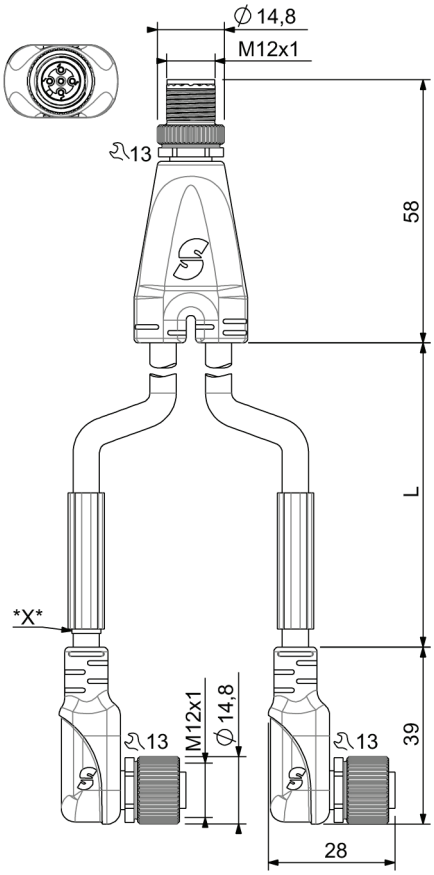

Wiring diagram :

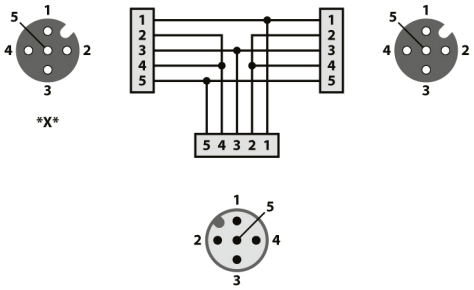

For uses in particularly harsh environments: Please enquire
We reserve the right to modify all or part of characteristics of our products without warning.

Printed on: 05 nov. 2020