L12/5LAD35

Industrial automation

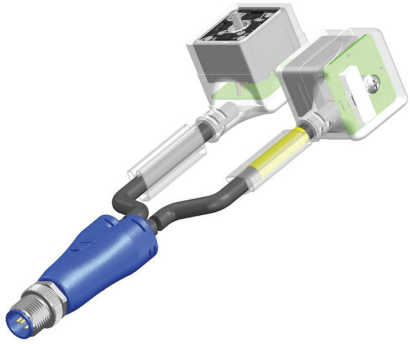

RoHS

Technical data :	
Rated voltage	24 V AC/DC
Rated current	4 A
Ambient temperature range	-10…70 °C
Protection :	
Protection degree	IP67
M12 male Y connector :	
Locking nut/screw material	Zamak, nickel-plated
Overmoulding material	TPU, self-extinguishing
Contact diameter	Ø1 mm
Contact material	CuZn, pre-plated with nickel and gold-plated
Contact resistance	< 5 mΩ
Solenoid valve connector (Form A) (2x) :	
Overmoulding material	TPU, self-extinguishing
Contact centre distance	18 mm
Contact material	CuSn
Integrated interference suppression	Transil diode
Diode nominal voltage	42 V @ 1 mA
Diode peak-limiting voltage	58 V @ 25,8 A
Max. peak pulse power	1500 W @ 25 °C (pulse 10/1000µs)
LED(s) colour	Green LED
Compatibility type	PNP
Current consumption per LED	< 5 mA
Status indication :	
Signal	Green LED
Cable characteristics :	
Sheath material	PVC
Wire structure	3 G 0,50 mm²
Conductor class	5
Sheath diameter	5,7 mm
Flame resistance according to	IEC 60332-1 (VDE 0472-804/B)
Oil resistance according to	CNOMO E03.40.150.N
Cable length :	
L length	3 m
Other length	On request
Accessories (included) :	
1 captive screw on the solenoid valve connector	
1 sticker on the solenoid valve connector	
2 label holders	
Notes :	
X : Coloured marker	

Dimensions :

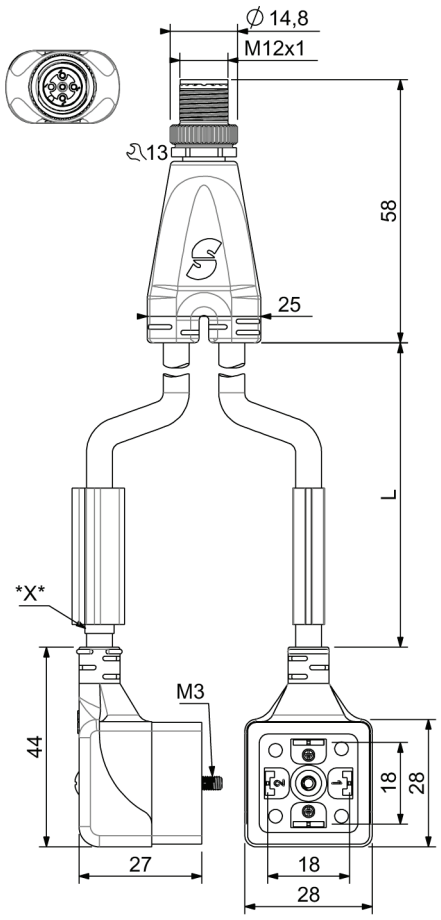

Wiring diagram :

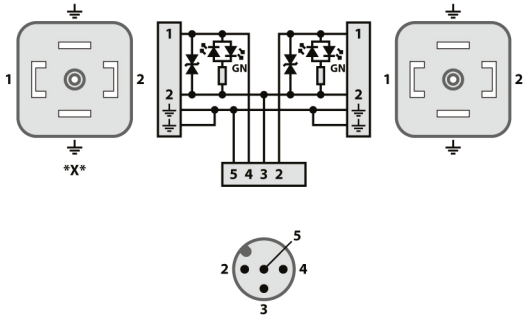

For uses in particularly harsh environments: Please enquire
We reserve the right to modify all or part of characteristics of our products without warning.

Printed on: 04 nov. 2020