EXXXV05M18XXX1E

Through-beam series
M18

CE RoHS

Technical data :	
Rated operating distance (Sn)	10 m
Output type	PNP
Operating voltage	10…30 V DC
No-load consumption	< 30 mA
Ambient temperature range	-25...55 °C
Switching frequency	500 Hz
Power-on delay	< 300 ms
Detection range	0...10 m
Adjustment method	By potentiometer
Adjustment for semi-transparent object	
Optical characteristics :	
Light type	Red (660 nm)
Ambient light immunity	100 klx
Protection :	
Reverse polarity protection	
IEC 61000-4-2 (ESD)	4 kV contact / 8kV air
IEC 61000-4-4 (Burst)	2kV / 5kHz
IEC 61000-4-6 (RF conducted)	3V 150kHz...80MHz
Protection degree	IP67
Materials :	
Housing	Brass, nickel-plated
Sensing face	PMMA
Status indication :	
Power	Green LED
Connection :	
Connector	M12
Accessories (included) :	
2 nickel-plated brass fixing nuts	
Accessories (not included) :	
Receiver E128V05M1810K1R	

Dimensions :

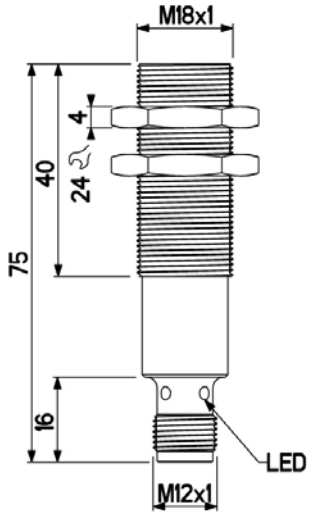

Lateral approach diagram :

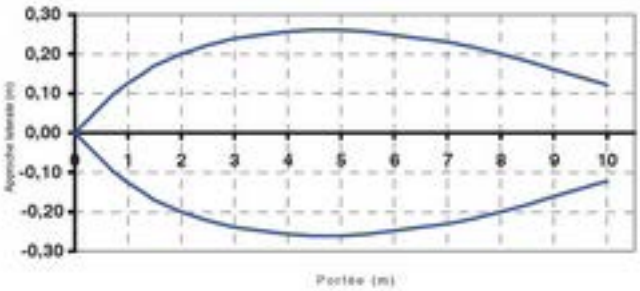

Connection diagram :

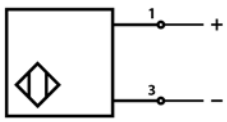

Pin assignment :

For uses in particularly harsh environments: Please enquire
We reserve the right to modify all or part of characteristics of our products without warning.

Printed on: 11 mars 2015