C1263K02Q290321PZ

Q29

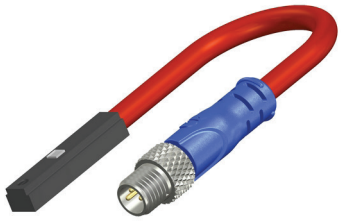

Technical data :	
Output type	PNP
Function	NO
Operating voltage	4,5…28 V DC
Operating current	80 mA
No-load consumption	< 10 mA
Voltage drop	< 1 V
Residual current	< 100 µA
Ambient temperature range	-10...60 °C
Switching frequency	500 Hz
Protection :	
IEC 61000-4-2 (ESD)	4 kV contact / 8kV air
IEC 61000-4-4 (Burst)	2kV / 5kHz
IEC 61000-4-6 (RF conducted)	3V 150kHz…80MHz
Protection degree	IP67
Materials :	
Housing	Plastic
Status indication :	
Output	Red LED
Connection :	
Connector	M8
Cable	PVC
Cable length	0,2 m (0/+2 cm)
Cable protection	Silicone-coated fiberglass braided sleeving

Dimensions :

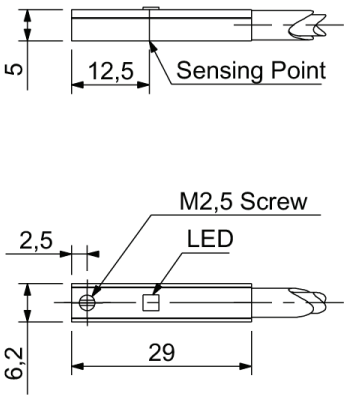

Connection diagram :

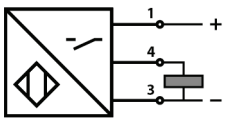

Pin assignment :

For uses in particularly harsh environments: Please enquire
We reserve the right to modify all or part of characteristics of our products without warning.

Printed on: 09 juil. 2020