A22XXD1K500121

K500 removable sensors
K500

Technical data :	
Rated operating distance (Sn)	1,8 mm
Mounting mode	Flush
Operating voltage	10…30 V DC
Ambient temperature range	0...60 °C
Protection :	
Magnetic field immunity (welding current)	
IEC 61000-4-2 (ESD)	4 kV contact / 8kV air
IEC 61000-4-4 (Burst)	2kV / 5kHz
IEC 61000-4-6 (RF conducted)	3V 150kHz…80MHz
Class II insulation	
Protection degree	IP67 (only when plugged)
Materials :	
Sensors receptacle	Zamak
Sensors housings	PA
Sensing face	PA
Cables definition :	
Cable (satellites)	PUR
LS2 Cable length	95 mm (0/+10 mm)
LS4 Cable length	95 mm (0/+10 mm)
Accessories (included) :	
1x FHC M5-10 Steel screw (ISO 10642 DIN 7991)	
Maximum recommended tightening torque 2 N.m	
Remarks :	

To operate, this sensor must be plugged to the "K500 removable amplifier" reference :
A1263H1K50XX2X or A1263V1K50XX2X or A1263VBK50XX2X.
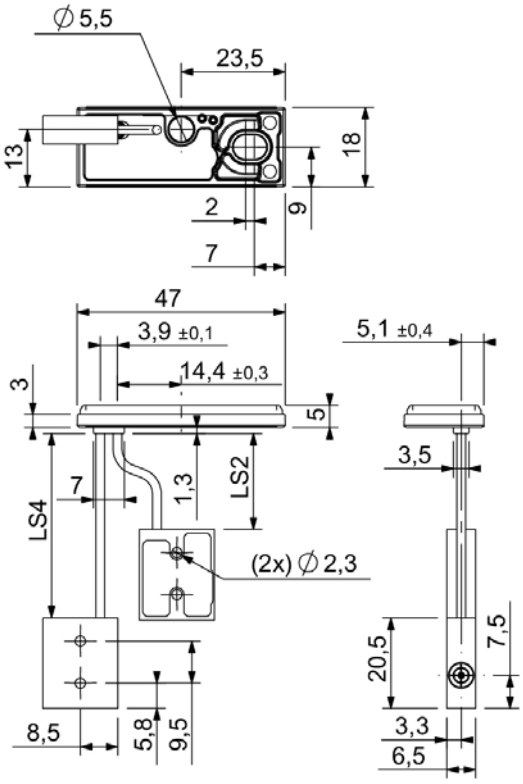
Dimensions :