A1263L03Q270441CR

Welding environment
Q27

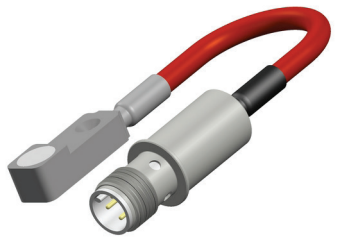

Technical data :	
Rated operating distance (Sn)	4 mm
Mounting mode	Flush
Output type	PNP
Function	NO
Operating voltage	10…30 V DC
Operating current	100 mA
Non-Load consumption	< 15 mA
Voltage drop	< 2 V
Residual current	< 70 µA
Ambient temperature range	0...85 °C
Hysteresis	3...15 %
Repeatability	< 5 %
Switching frequency	500 Hz
Protection :	
Reverse polarity protection	
Short-circuit protection	
Overload protection	
IEC 61000-4-2 (ESD)	4kV Contact / 8kV Air
IEC 61000-4-4 (Burst)	2kV / 5kHz
IEC 61000-4-6 (RF conducted)	3V 150kHz…80MHz
Protection degree	IP67
Materials :	
Housing	Anodized aluminium
Connector	Brass, nickel-plated
Sensing face	Ceramic
Status indication :	
Power / Output	Green LED / Yellow LED
Connection :	
Connector	M12
Cable	Halogen free PUR (2 x 0,34 mm²)
Cable length	0,3 m (0/+10 mm)
Cable protection	Silicone-coated fiberglass braided sleeving

Dimensions :

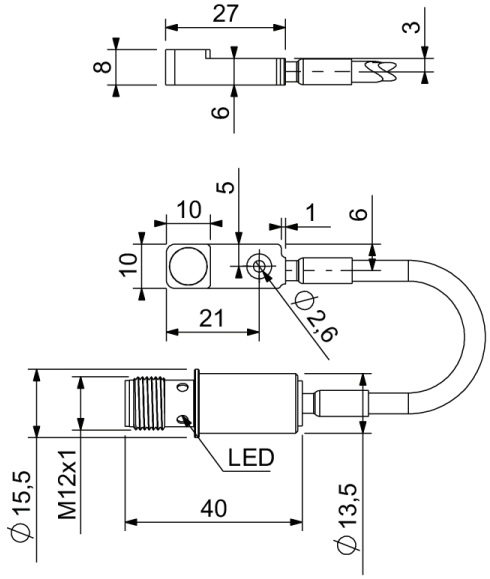

Connection diagram :

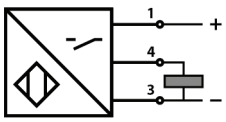

Pin assignment :

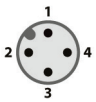

For uses in particularly harsh environments: Please enquire
We reserve the right to modify all or part of characteristics of our products without warning.

Printed on: 23 févr. 2023