A1263L00Q402081P

Weldy
Q40

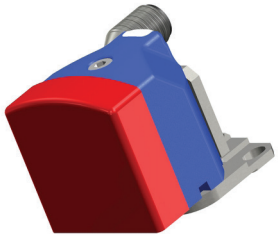

Technical data :	
Rated operating distance (Sn)	20 mm
Mounting mode	Flush (*)
(*) Rated operating distance (Sn) is reached when the product is flush mounted	
Output type	PNP
Function	NO
Operating voltage	10…30 V DC
Operating current	200 mA
No-load consumption	< 20 mA
Voltage drop	< 2 V
Residual current	< 70 µA
Ambient temperature range	-25...70 °C
Hysteresis	2...15 %
Repeatability	< 5 %
Switching frequency	100 Hz
Protection :	
Reverse polarity protection	
Short-circuit protection	
Overload protection	
IEC 61000-4-2 (ESD)	4kV Contact / 8kV Air
IEC 61000-4-4 (Burst)	2kV / 5kHz
IEC 61000-4-6 (RF conducted)	3V 150kHz…80MHz
Class II insulation	
Protection degree	IP67
Materials :	
Housing	PA
Connector	Brass, nickel-plated
Sensing face	PA, welding protection coating
Status indication :	
Power	Green LED
Output	Yellow LED
Connection :	
Connector	M12
Accessories (included) :	
1 Q40 zamak holder	
1 zinc-plated steel screw CHC M4-40 mm	
1 stainless steel spring washer, Type S	

Dimensions :

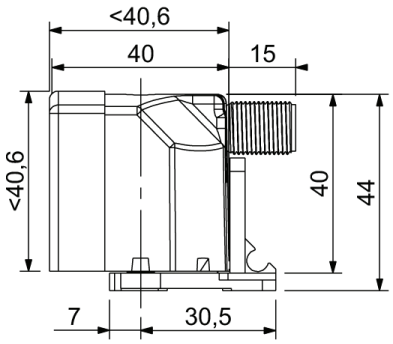

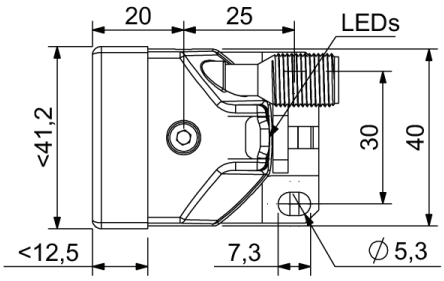

Connection diagram :

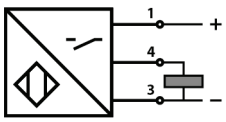

Pin assignment :

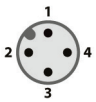

For uses in particularly harsh environments: Please enquire
We reserve the right to modify all or part of characteristics of our products without warning.

Printed on: 03 févr. 2022