A126305K500/65DB

K500

Technical data :	
Rated operating distance (Sn)	1,8 mm
Mounting mode	Flush
Output type	PNP
Function	NO
Operating voltage	15…30 V DC
Operating current	200 mA
No-load consumption	< 25 mA
Voltage drop	< 2 V
Residual current	< 70 µA
Ambient temperature range	-25...70 °C
Hysteresis	3...15 %
Repeatability	< 5 %
Switching frequency	1 kHz
Protection :	
Reverse polarity protection	
Short-circuit protection	
Overload protection	
IEC 61000-4-2 (ESD)	4 kV contact / 8kV air
IEC 61000-4-4 (Burst)	2kV / 5kHz
IEC 61000-4-6 (RF conducted)	3V 150kHz…80MHz
Class II insulation	
Protection degree	IP67
Materials :	
Main housing	Zamak
Satellite housing	PA
Sensing face	PA
Status indication :	
Power	Green LED
Output S4	Yellow LED
Output S2	White LED
Connection :	
Connector	M12
Cable (satellites)	PUR
LS2 Cable length	105 mm (0/+10 mm)
LS4 Cable length	105 mm (0/+10 mm)

CE RoHS

Dimensions :

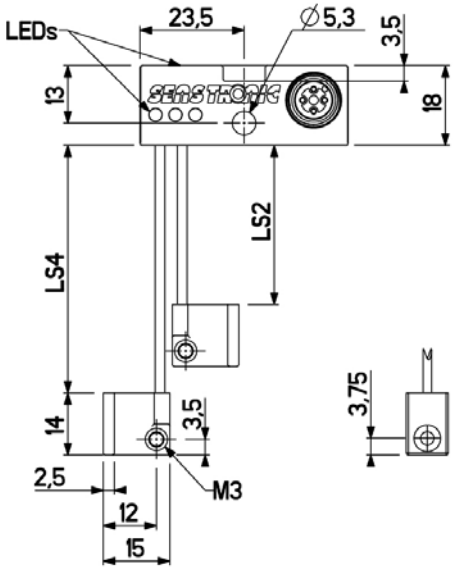

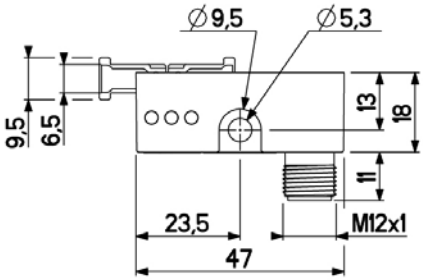

Connection diagram :

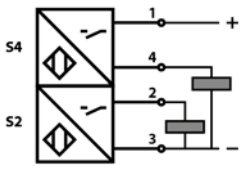

Pin assignment :

For uses in particularly harsh environments: Please enquire
We reserve the right to modify all or part of characteristics of our products without warning.

Printed on: 11 mars 2015