A1234M21Q261021PU

Q26

Technical data :	
Rated operating distance (Sn)	10 mm
Mounting mode	Flush
Output type	NPN
Function	NO/NC
Operating voltage	10…30 V DC
Operating current	200 mA
No-load consumption	< 10 mA
Voltage drop	< 2 V
Residual current	< 70 µA
Ambient temperature range	-25...70 °C
Hysteresis	3...15 %
Repeatability	< 5 %
Switching frequency	150 Hz
Protection :	
Reverse polarity protection	
Short-circuit protection	
Overload protection	
IEC 61000-4-2 (ESD)	4 kV contact / 8kV air
IEC 61000-4-4 (Burst)	2kV / 5kHz
IEC 61000-4-6 (RF conducted)	3V 150kHz…80MHz
Class II insulation	
Protection degree	IP67
Materials :	
Housing	PA
Sensing face	PA
Status indication :	
Output	Yellow LED
Connection :	
Cable	PUR (4x0,34mm²)
Cable length	2,03 m (0/+30 mm)
Accessories (included) :	

1 Q26 zamak holder
1 zinc-plated steel screw CHC M4-30 mm
1 zinc-plated steel screw CHC M4-8 mm
1 zinc-plated steel screw CHC M4-6 mm

Dimensions :

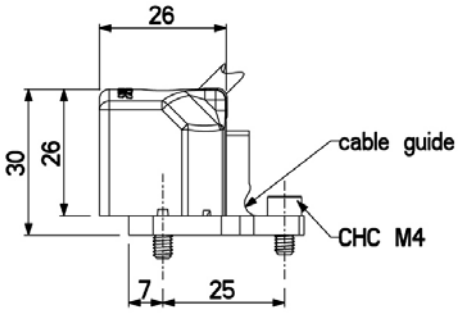

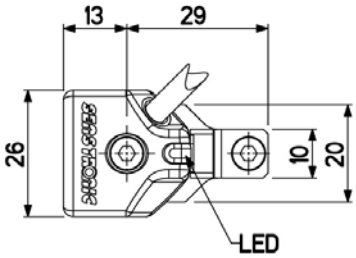

Connection diagram :

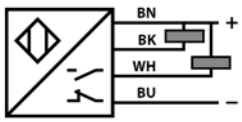

For uses in particularly harsh environments: Please enquire
We reserve the right to modify all or part of characteristics of our products without warning.

Printed on: 08 sept. 2016